HOSPITERA: Journal of Hospitality and Tourism Research
Volume 02 Number 01, October (2026)

Driving Customer Loyalty in Star-Rated Hotels through Experiential Marketing and Service Convenience with Mediating Role of Customer Satisfaction

Elkunny Dovir Siratan[1*], Sophia Reni Susilo[2], Angelika[3]
Universitas Bunda Mulia[1,2,3], Jakarta, Indonesia
Email: esiratan@bundamulia.ac.id1[*1], ssusilo@bundamulia.ac.id[2], s12240211@student.ubm.ac.id[3]

Article History
Submitted: 01 August 2026
Revised: 18 August 2026
Accepted: 06 October 2026
Published: 31 October 2026

Keywords:
Customer Loyalty, Customer Satisfaction, Experiential Marketing, Service Convenience

Abstract

Intensifying competition and digitally mediated customer choice have made loyalty a strategic priority for star-rated hotels, requiring both memorable experiences and effortless service processes. This study examines the direct and indirect effects of experiential marketing and service convenience on customer loyalty through customer satisfaction among guests of three to five star hotels in Jakarta, representing the hotel categories included in this study. A quantitative explanatory design was applied to data from 250 respondents selected through purposive sampling. Data were collected using a five-point Likert-scale questionnaire and analyzed through partial least squares structural equation modeling with SmartPLS 3. All hypothesized relationships were positive and significant ($p < 0.001$). Customer satisfaction had the strongest direct effect on loyalty ($\beta = 0.553$), followed by experiential marketing ($\beta = 0.250$) and service convenience ($\beta = 0.158$). Experiential marketing ($\beta = 0.437$) and service convenience ($\beta = 0.373$) significantly increased satisfaction. Satisfaction partially mediated the effects of experiential marketing ($\beta = 0.242$) and service convenience ($\beta = 0.206$) on loyalty. The model explained 63.7% of loyalty variance. Customer loyalty is strengthened by integrating emotionally engaging experiences with convenient service delivery, while satisfaction serves as the key mechanism linking both factors to revisit and recommendation intentions.

OPEN ACCESS

© 2026 by the authors. Submitted for possible open access publication under the terms and conditions of the Creative Commons Attribution 4.0 International License (CC BY 4.0) license

INTRODUCTION

The hospitality industry has become one of the most competitive service sectors because hotel customers increasingly evaluate accommodation providers not only through tangible facilities, price, and location, but also through the total experience created before, during, and after the stay (Alnawas & Hemsley-Brown, 2019; Guan et al., 2021). This study specifically focuses on three-, four-, and five-star hotels rather than treating all star-rated hotels as a homogeneous category, since the official Indonesian accommodation classification distinguishes hotels according to their star levels (Badan Pusat Statistik, 2026). This distinction is relevant because hotel star rating can influence service characteristics, service-quality priorities, and guest expectations, which may consequently affect customer satisfaction and behavioral responses (Nunkoo et al., 2020). However, star classification alone is no longer sufficient to guarantee customer loyalty because guests compare hotels through online reviews, service responsiveness, booking convenience, perceived value, and memorable experiences (El-Adly, 2019; Yoo et al., 2022). Therefore, customer loyalty in star-rated hotels has become a crucial research issue because loyal customers are more likely to revisit, recommend the hotel, provide positive electronic word-of-mouth, and support long-term hotel profitability (Anabila et al., 2022; Rather & Hollebeek, 2019). This condition highlights the need to examine the factors that drive customer loyalty in star-rated hotels, particularly experiential marketing, service convenience, and customer satisfaction as a mediating mechanism (Carmo et al., 2022; Pinaraswati et al., 2024).

In the hospitality industry, loyalty extends beyond transactional satisfaction and is shaped by emotional bonds fostered through consistent, high-quality digital experiences (Siratan & Liu, 2026). Customer loyalty is the most important in hospitality marketing because it reflects customers willingness to repurchase, revisit, recommend, and maintain a relationship with a service provider despite the availability of competing alternatives (Anabila et al., 2022; Rather & Hollebeek, 2019). In hotel services, loyalty is especially important because guests can easily switch to other hotels through online travel agencies, price comparison platforms, and digital review systems that increase market transparency (Guan et al., 2021; Yoo et al., 2022). Recent hotel research shows that loyalty is not produced only by functional service performance but also by affective responses, perceived value, trust, identification, and satisfaction formed across the entire hospitality experience (El-Adly, 2019; Rather & Hollebeek, 2019). On the other hand, customer satisfaction is crucial role since represents the customer's evaluative response after comparing expectations with actual service experience (Anabila et al., 2022; Danurdara & Masatif, 2025). In the hotel context, satisfied customers tend to perceive that the hotel has delivered value, comfort, emotional benefit, and service reliability, which can strengthen their intention to revisit and recommend the hotel to others (El-Adly, 2019; Subakti et al., 2024). Nevertheless, customer satisfaction does not always automatically lead to loyalty because customers may remain willing to switch when other hotels provide more attractive experiences, easier service processes, or better digital convenience (Guan et al., 2021; Pinaraswati et al., 2024). This indicates that satisfaction should not only be studied as a direct predictor of loyalty but also as a mechanism that explains how customers transform experiential and convenience-based evaluations into loyalty intentions (Carmo et al., 2022; Danurdara & Masatif, 2025). Thus, this study considers customer satisfaction as a mediating variable between experiential marketing, service convenience, and customer loyalty in star-rated hotels because satisfaction can clarify the psychological process through which customers become loyal after receiving memorable and effortless services (Anabila et al., 2022; Pinaraswati et al., 2024).

Experiential marketing as a marketing approach that creates customer value through sensory stimulation, emotional involvement, cognitive engagement, behavioral participation, and relational connection during the customer journey (Carmo et al., 2022). Experiential marketing is increasingly relevant in hotel management because hospitality consumption is naturally experiential, emotional, sensory, and relational rather than merely transactional (Alnawas, 2019; Carmo et al., 2022). In star-rated hotels, experiential marketing can be reflected through room atmosphere, interior design, employee hospitality, local cultural elements, food and beverage experience, personalized services, digital interaction, and the overall ambience perceived by guests during their stay (Alnawas, 2019; Subakti et al., 2024). Experiential marketing can strengthen customer satisfaction because hotel guests evaluate not only the core accommodation product but also the emotional impressions and memorable moments created through service encounters (Carmo et al., 2022; Guan et al., 2021). Empirical evidence in hospitality and service research indicates that positive customer experience contributes to satisfaction, brand affect, perceived value, and loyalty because customers tend to maintain relationships with brands that provide meaningful and differentiated experiences (Alnawas & Hemsley-Brown, 2019; Guan et al., 2021). Although experiential marketing and customer experience are closely related, they represent different concepts. Experiential marketing refers to firm-initiated strategies designed to stimulate customers' sensory, emotional, cognitive, behavioral, and relational responses, whereas customer experience reflects customers' subjective evaluations of their interactions with the hotel ((Becker & Jaakkola, 2020; Lemon & Verhoef, 2016). Also, experiential marketing can enhance satisfaction and loyalty when hotels are able to combine physical atmosphere, service quality, and distinctive guest experiences (Subakti et al., 2024). In service context, convenience generally refers to the extent to which customers perceive that a service provider makes decision-making, access, transaction, benefit acquisition, and post-service processes easier and more efficient (Pinaraswati et al., 2024; Sun & Pan, 2023). Service convenience is another important factor since modern customers increasingly value services that reduce time, effort, uncertainty, and psychological burden during the consumption process (Pinaraswati et al., 2024; Sun & Pan, 2023). In star-rated hotels, service convenience may include easy online reservation, clear information availability, accessible hotel location, fast check-in and check-out, flexible payment methods, responsive staff assistance, efficient complaint handling, and convenient post-stay follow-up (Guan et al., 2021; Yoo et al., 2022). Service convenience can improve customer satisfaction because customers who spend less time and effort during the service process are more likely

to perceive the hotel as reliable, responsive, and customer-oriented (Pinaraswati et al., 2024; Sun & Pan, 2023).

Recent empirical studies indicate that service convenience significantly influences customer satisfaction and loyalty because customers increasingly value service processes that minimize time, effort, and uncertainty (Pinaraswati et al., 2024; Sun & Pan, 2023). In hotel services, convenience is particularly relevant across customer touchpoints such as reservation, access, check-in, payment, service requests, complaint handling, and post-stay communication (Guan et al., 2021; Pinaraswati et al., 2024). Nevertheless, service convenience has received relatively less attention than service quality, perceived value, and customer experience in explaining hotel loyalty, despite its potential to determine whether customers perceive hotel services as easy, efficient, and worth revisiting (El-Adly, 2019; Pinaraswati et al., 2024). Therefore, examining service convenience provides an important functional perspective for explaining customer loyalty in star-rated hotels (Pinaraswati et al., 2024; Sun & Pan, 2023). Although previous studies have established experiential marketing as an important predictor of customer satisfaction and loyalty, fewer studies have examined it together with service convenience within the same loyalty model (Carmo et al., 2022; Pinaraswati et al., 2024). These two constructs represent complementary dimensions of the hotel experience, because experiential marketing emphasizes emotional and memorable interactions, whereas service convenience emphasizes the reduction of customer time and effort during service delivery (Carmo et al., 2022; Sun & Pan, 2023). An emotionally attractive hotel experience may therefore be insufficient to generate loyalty when customers encounter inconvenient reservation, check-in, payment, or service processes (Becker & Jaakkola, 2020; Pinaraswati et al., 2024). Accordingly, integrating experiential marketing and service convenience may provide a more comprehensive explanation of how customer satisfaction and loyalty develop in star-rated hotel settings (Carmo et al., 2022; Pinaraswati et al., 2024).

This creates a research gap because the combined role of experiential marketing and service convenience in building loyalty through satisfaction has not been sufficiently examined in the context of star-rated hotels, particularly in Indonesia where hotel competition and digitalized customer behavior continue to intensify. On the other hand, many prior studies emphasize experiential marketing as a general predictor of loyalty without sufficiently integrating service convenience as a complementary functional factor in the same model. It is important because a hotel experience may be emotionally attractive but still fail to produce loyalty if customers experience difficulty in reservation, access, check-in, payment, service requests, complaint handling, or post-stay communication. Therefore, experiential marketing needs to be examined together with service convenience to provide a more comprehensive explanation of customer loyalty in star-rated hotels. Based on preceding discussion, this study is grounded in the assumption that customer loyalty in star-rated hotels is shaped by both emotional-experiential factors and functional-convenience factors, with customer satisfaction serving as the mediating mechanism that connects these antecedents to loyalty outcomes. The first research gap concerns the limited integration of experiential marketing and service convenience in one loyalty model, although both variables represent different but complementary dimensions of the hotel customer journey. The second research gap concerns the mediating role of customer satisfaction, because previous studies confirm the importance of satisfaction but still leave room for further investigation on how satisfaction explains the effects of experiential marketing and service convenience on loyalty in star-rated hotel settings. The third research gap concerns the Indonesian hotel context, where recent official statistics indicate that hotel performance remains strategically important for tourism development, yet hotel managers must continue strengthening loyalty in a competitive and digitally mediated market. Indonesia's star-rated hotel industry comprises a substantial number of accommodation establishments. In 2025, Indonesia recorded 4,790 star-rated hotels with approximately 459,889 rooms, indicating that hotel guests have access to a wide range of accommodation alternatives (Badan Pusat Statistik, 2026). However, aggregate indicators such as occupancy rates, guest numbers, and length of stay primarily reflect hotel utilization and do not directly indicate whether guests repeatedly choose the same hotel.

Therefore, customer loyalty needs to be examined directly through customers' intentions to revisit, recommend, and maintain their relationship with a hotel. The empirical issue becomes particularly relevant in Jakarta because the city represents a highly competitive hotel market in which customers are exposed to numerous accommodation alternatives and can easily compare hotel offerings through digital platforms (Badan Pusat Statistik Provinsi DKI Jakarta, 2026). In December 2025, the room occupancy

rate of star-rated hotels in Jakarta reached 59.97%, representing a decline of 2.08 percentage points compared with the same month of the previous year, which indicates that maintaining hotel utilization remains a continuing managerial challenge despite the large urban tourism market (Badan Pusat Statistik Provinsi DKI Jakarta, 2026). The fluctuating occupancy performance suggests that attracting guests alone is insufficient, because hotels must also encourage customers to revisit, recommend, and consistently prefer the same hotel amid competing alternatives (Anabila et al., 2022; Rather & Hollebeek, 2019). Jakarta was therefore selected as the empirical setting because its competitive hotel environment provides a relevant context for examining how experiential marketing and service convenience strengthen customer satisfaction and ultimately support customer loyalty (Badan Pusat Statistik Provinsi DKI Jakarta, 2026; Carmo et al., 2022). Jakarta is used as a specific empirical setting rather than as a statistical representation of the entire Indonesian hotel market, because hotel market characteristics, tourism demand, and customer behavior may differ across Indonesian regions. Accordingly, the findings of this study should be interpreted within the context of three, four, and five-star hotels in Jakarta, while broader generalization to Indonesia requires further evidence from other destinations and regional hotel markets . Theoretically, this study contributes to hospitality marketing literature by integrating experiential marketing as an affective and experiential stimulus with service convenience as a functional and effort-reducing stimulus in a unified loyalty model. It further clarifies customer satisfaction as the psychological mechanism through which these two distinct service evaluations are transformed into loyalty. Practically, the study provides hotel managers with evidence concerning whether loyalty should be strengthened primarily through memorable guest experiences, more convenient service processes, or an integrated combination of both.

METHODS

This study employs a quantitative research approach because the research objective is to examine the causal relationships among variable (Siratan et al., 2026) such as; experiential marketing and service convenience as independent, customer satisfaction as mediating, and customer loyalty as dependent through measurable indicator variables and statistical hypothesis testing. This study is also categorized as explanatory research because it aims to explain how experiential marketing and service convenience influence customer loyalty both directly and indirectly through customer satisfaction (Hari et al., 2021).

The population of this study consists of customers who have stayed at three, four, or five-star hotels in Jakarta within the specified study period (Badan Pusat Statistik, 2026). This population is considered relevant because star-rated hotel customers experience formal hospitality services that include tangible facilities, employee interaction, digital service processes, convenience, emotional impressions, and post-stay evaluation (Alnawas & Hemsley-Brown, 2019; Guan et al., 2021). Hence, hotel star rating has been shown to influence the relative importance of service attributes and customer satisfaction, supporting the need to explicitly define the hotel categories examined rather than combining all-star rated accommodation into an undifferentiated population (Nunkoo et al., 2020). Accordingly, one and twostar hotels were not included in the sampling scope, and respondents were required to base their evaluations on their most recent stay at a three-, four-, or five-star hotel in Jakarta (Badan Pusat Statistik, 2026). However, since the exact number of customers who have stayed at star-rated hotels in Jakarta is difficult to determine precisely, this study treats the population as an unknown or unlimited population. The sampling technique applied in this study was non-probability purposive sampling, in which respondents were deliberately selected based on predetermined characteristics relevant to the research objectives (Palinkas et al., 2015). Purposive sampling was considered appropriate because the study required respondents with direct and recent experience of staying at three-, four-, or five-star hotels in Jakarta and sufficient exposure to the hotel service processes being evaluated (Palinkas et al., 2015; Hair et al., 2021). Hence purposive sampling is selected because the researcher requires respondents who meet specific criteria related to hotel-stay experience in Jakarta. The subject criteria for respondents are as follows: first, respondents must be at least 17 years old and respondents must have stayed at a a three, four, or five star rated hotel in Jakarta within the last twelve months as their evaluations were based on a relatively recent hotel experience. The first criterial is considered capable of making personal decisions regarding accommodation and service consumption, also by limiting the period to twelve months helps respondents recall the hotel's services, facilities, and overall experience more accurately, thereby

reducing the possibility of recall bias. Second, respondents must have personally experienced or involved in evaluating the hotel's core service processes, such as reservation, check-in, room service delivery, payment, or check-out, since customer evaluations are formed through interactions across multiple service touchpoints during the customer journey. The direct interaction with these services provides respondents with an adequate basis for evaluating experiential marketing and service convenience. Without direct service experience, respondents may not be able to provide reliable assessments of how enjoyable, memorable, accessible, and convenient the hotel services were. Third, they must answer the questionnaire voluntary based on their most recent star-rated hotel stay in Jakarta and must as a guest not as employees or members of the management of the hotel being evaluated. Since employees and management personnel may possess internal knowledge, professional interests, or emotional attachments to the hotel that could influence their responses, excluding these groups helps ensure that the collected data represent genuine customer perceptions and evaluations. Furthermore, voluntary participation also supports research ethics by ensuring that respondents provide their responses without pressure or coercion as well as to ensure that the responses reflected customer evaluations of service experiences.

Data collection may be conducted through an online questionnaire using Google Forms or other digital survey platforms uses a five-point Likert scale in ranges from 1 to 5, where 1 indicates "strongly disagree" and 5 indicates "strongly agree." (Anto & Siratan, 2026). The minimum sample size was determined based on the guidelines proposed by Hair et al. (2021), which recommend a ratio of five to ten observations for each indicator included in the research model. Given that the present study employed 19 indicators, a minimum sample of 190 respondents was required. Nevertheless, the study targeted 250 respondents, providing an additional buffer of approximately 31,6% or 32% to compensate for incomplete, invalid, or otherwise unusable questionnaires. The larger sample was also expected to improve the statistical power and stability of the model estimates. The data analysis method used in this study is Partial Least Squares Structural Equation Modeling with SmartPLS 3 software. Using PLS-SEM as data analysis method is appropriate for this study because the research model contains several latent variables, multiple indicators, direct effects, and mediating effects with analysis stages were outer model analysis and inner model analysis (Hair et al., 2021).

RESULTS AND DISCUSSION

The following section presents the demographic characteristics of the 250 respondents who participated in this study.

Table 1. Profile of Responden Result

Characteristic	Category	Frequency (n)	Percentage (%)
Gender	Male	124	49.6
	Female	126	50.4
Education	Senior secondary school	25	10.0
	Diploma	50	20.0
	Bachelor	133	53.2
	Master	35	14.0
	Doctoral	7	2.8
Age	17–25 years	16	6.4
	26–33 years	64	25.6
	34–41 years	105	42.0
	42–49 years	58	23.2
	>50 years	7	2.8
Hotel-stay frequency	Once	73	29.2
	Twice	58	23.2
	Three times	57	22.8
	Four times	27	10.8
	Five times	25	10.0
	More than five times	10	4.0

Hotel category	Three-star	126	50.4
	Four-star	68	27.2
	Five-star	56	22.4
Length of stay	One night	115	46.0
	Two nights	90	36.0
	Other lengths of stay	45	18.0
Main service encounter evaluated	Reservation	65	26.0
	Check-in	47	18.8
	Room service	38	15.2
	Other service encounters	100	40.0

Source: Data processed by the author (2026)

Table 1 summarizes the demographic and hotel-stay characteristics of the 250 respondents, The respondent profile indicates a relatively balanced gender distribution, with females accounting for 50.4% and males 49.6% of the sample. Most respondents held a bachelor's degree (53.2%) and were aged 34–41 years (42.0%), suggesting that the sample was dominated by mature and well-educated hotel customers. Regarding hotel-stay frequency, most respondents had stayed between one and three times, with one-time stays representing the largest group (29.2%). Three-star hotels were the most frequently used category (50.4%), followed by four-star (27.2%) and five-star hotels (22.4%). Most respondents stayed for one night (46.0%), while reservation was the most frequently evaluated service encounter (26.0%).

Table 2. Construct Reliability And Validity Results

Variable	Cronbach's alpha	Composite reliability (rho_a)	Composite reliability (rho_c)	Average variance extracted (AVE)
Customer Loyalty (CL)	0,921	0,922	0,944	0,809
Customer Satisfaction (CS)	0,936	0,936	0,951	0,796
Experiential Marketing (EM)	0,928	0,932	0,946	0,776
Service Convenience (SC)	0,923	0,923	0,942	0,765

Source: Data processed by the author (2026)

Based on table 2, demonstrates strong reliability and convergent validity across all constructs. Cronbach's alpha values range from 0.921 to 0.936, while composite reliability coefficients exceed 0.942, indicating excellent internal consistency. Likewise, rho_A values remain above 0.922, confirming construct stability. The average variance extracted ranges from 0.765 to 0.809, substantially surpassing the recommended 0.50 threshold (Hair et al., 2021). Therefore, customer loyalty, customer satisfaction, experiential marketing, and service convenience are measured reliably and possess adequate convergent validity, supporting their suitability for subsequent structural model analysis.

Table 3. R-square Results

Variable	R-square	R-square adjusted
Customer Loyalty (CL)	0,637	0,633
Customer Satisfaction (CS)	0,404	0,399

Source: Data processed by the author (2026)

Based on table 3, the R-square results indicate that the model explains 63.7% of the variance in customer loyalty and 40.4% in customer satisfaction. Adjusted values of 0.633 and 0.399 show minimal

estimation bias, confirming stable explanatory power (Hair et al., 2021). Thus, the model demonstrates substantial predictive relevance for loyalty and moderate relevance for satisfaction outcomes overall.

Table 4. Heterotrait-monotrait ratio (HTMT) Results

Variable	CL	CS	EM	SC
Customer Loyalty (CL)				
Customer Satisfaction (CS)	0,815			
Experiential Marketing (EM)	0,615	0,555		
Service Convenience (SC)	0,514	0,507	0,242	

Source: Data processed by the author (2026)

Based on table 4, the HTMT results confirm satisfactory discriminant validity among all constructs. The coefficients range from 0.242 to 0.815, remaining below the conservative threshold of 0.85 (Hair et al., 2021). The highest association appears between customer loyalty and customer satisfaction, indicating conceptual relatedness without excessive overlap. Lower ratios involving experiential marketing and service convenience further demonstrate construct distinctiveness. Accordingly, customer loyalty, customer satisfaction, experiential marketing, and service convenience represent empirically distinguishable dimensions suitable for subsequent structural model assessment and hypothesis testing.

Table 5. Fornell-Larcker Criterion Results

Variable	CL	CS	EM	SC
Customer Loyalty (CL)	0,899			
Customer Satisfaction (CS)	0,757	0,892		
Experiential Marketing (EM)	0,574	0,522	0,881	
Service Convenience (SC)	0,475	0,472	0,226	0,875

Source: Data processed by the author (2026)

Based on table 5, the Fornell–Larcker results establish satisfactory discriminant validity across all constructs. The square roots of AVE, shown on the diagonal, range from 0.875 to 0.899 and exceed the corresponding inter-construct correlations. Customer loyalty and customer satisfaction exhibit the strongest correlation at 0.757, yet this remains below their diagonal values. Likewise, experiential marketing and service convenience remain empirically distinct. These findings confirm that each construct captures a unique conceptual domain and is appropriate for structural model evaluation.

Table 6. Outer Loadings Results

Variable	Item	Statement	Loading	Source
Customer Loyalty (CL)	CL1	I intend to stay at this hotel again in the future.	0,910	Padlee et al. (2019); Lai (2019)
	CL2	I would recommend this hotel to other people.	0,904	Padlee et al. (2019); Lai (2019)
	CL3	I would consider this hotel as my first choice when I need similar accommodation.	0,888	Padlee et al. (2019); Lai (2019)
	CL4	I intend to continue	0,894	Padlee et al.

		choosing this hotel for future stays when possible.		(2019); Lai (2019)
Customer Satisfaction (CS)	CS1	Overall, I am satisfied with the services provided by this hotel.	0,896	Al Khattab & Aldehayyat (2011); Padlee et al. (2019)
	CS2	I am satisfied with my decision to stay at this hotel.	0,892	Al Khattab & Aldehayyat (2011); Padlee et al. (2019)
	CS3	Choosing this hotel was a good decision for me.	0,895	Al Khattab & Aldehayyat (2011); Padlee et al. (2019)
	CS4	The hotel experience met my expectations.	0,885	Al Khattab & Aldehayyat (2011); Padlee et al. (2019)
	CS5	I feel positive about my overall experience of staying at this hotel.	0,892	Padlee et al. (2019)
Experiential Marketing (EM)	EM1	The hotel provides an attractive sensory experience through its atmosphere, interior, and physical environment.	0,886	Schmitt (1999); Tasci & Milman (2019)
	EM2	The hotel creates positive emotions and pleasant feelings during my stay.	0,878	Schmitt (1999); Tasci & Milman (2019)
	EM3	The hotel experience encourages positive actions and involvement during my stay.	0,889	Schmitt (1999); Tasci & Milman (2019)
	EM4	The hotel experience stimulates my interest and encourages me to think about its distinctive features.	0,874	Schmitt (1999); Tasci & Milman (2019)
	EM5	The hotel experience helps me feel connected with other people, lifestyles, or social environments.	0,879	Schmitt (1999); Tasci & Milman (2019)
Service Convenience (SC)	SC1	It is easy for me to obtain information and decide whether this hotel meets my accommodation needs.	0,890	Seiders et al. (2007)
	SC2	It is easy and convenient for me to access the hotel and its services.	0,896	Seiders et al. (2007)

	SC3	Reservation, payment, check-in, and check-out processes at this hotel are easy to complete.	0,862	Seiders et al. (2007)
	SC4	I can obtain and use the hotel services I need with minimal time and effort.	0,876	Seiders et al. (2007)
	SC5	It is easy to obtain assistance or resolve problems after using the hotel's services.	0,848	Seiders et al. (2007)

Source: Data processed by the author (2026)

Based on table 6, the outer-loading results demonstrate strong indicator reliability and convergent validity across all constructs. All item loadings range from 0.848 to 0.910, exceeding the recommended threshold of 0.70 (Hair et al., 2021). Customer loyalty indicators show the highest loading values, while service convenience item SC5 records the lowest, yet remains acceptable. Consequently, every indicator adequately represents its respective latent construct and can be retained for subsequent structural model estimation and hypothesis testing in further analyses. For clarity, the measurement indicators are coded according to their respective latent constructs, where CL1–CL4 represent customer loyalty indicators, CS1–CS5 represent customer satisfaction indicators, EM1–EM5 represent experiential marketing indicators, and SC1–SC5 represent service convenience indicators (Hair et al., 2021). These codes identify individual questionnaire items used to operationalize each latent construct and should therefore be interpreted as indicator codes rather than separate latent variables (Hair et al., 2021).

Table 7. Path Coefficients (Direct And Indirect Effect) Results

Variable	Original sample (O)	Sample mean (M)	Standard deviation (STDEV)	T statistics (|O/STDEV|)	P values
CS -> CL	0,553	0,551	0,045	12,304	0,000
EM -> CL	0,250	0,252	0,043	5,806	0,000
EM -> CS	0,437	0,438	0,048	9,082	0,000
SC -> CL	0,158	0,157	0,043	3,660	0,000
SC -> CS	0,373	0,374	0,047	7,994	0,000
EM -> CS -> CL	0,242	0,241	0,032	7,573	0,000
SC -> CS -> CL	0,206	0,206	0,032	6,500	0,000

Source: Data processed by the author (2026)

Based on table 7, the path coefficient results indicate that all direct and indirect relationships are positive and statistically significant ($p < 0.001$). Customer satisfaction exerts the strongest direct effect on customer loyalty ($\beta = 0.553$; $t = 12.304$). Experiential marketing significantly influences customer satisfaction ($\beta = 0.437$) and customer loyalty ($\beta = 0.250$), while service convenience also affects customer satisfaction ($\beta = 0.373$) and customer loyalty ($\beta = 0.158$). Moreover, the indirect effects of experiential marketing ($\beta = 0.242$) and service convenience ($\beta = 0.206$) on loyalty through satisfaction are significant. Accordingly, customer satisfaction partially mediates both relationships, confirming its central role in strengthening customer loyalty within the proposed structural model framework overall (Hair et al., 2021).

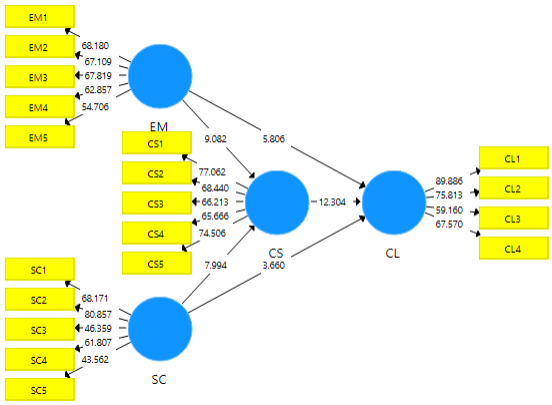

Source: Data processed by the author (2026)

Figure 1. PLS-SEM Model Results

Based on figure 1, the PLS-SEM model confirms that experiential marketing and service convenience significantly influence customer satisfaction and customer loyalty. Customer satisfaction exhibits the strongest structural effect on loyalty (t = 12.304), followed by experiential marketing on satisfaction (t = 9.082) and service convenience on satisfaction (t = 7.994). Direct effects of experiential marketing and service convenience on loyalty are also significant, with t-values of 5.806 and 3.660, respectively. All measurement indicators show strong statistical significance, supporting the robustness and validity of the outer and inner model estimates (Hair er al., 2021). This study examined the effects of experiential marketing and service convenience on customer loyalty, both directly and indirectly through customer satisfaction among customers of star-rated hotels in Jakarta. These findings indicate that customer loyalty in the star-rated hotel industry is not formed solely through the provision of functional accommodation (El-Adly, 2019). Loyalty is also developed through memorable customer experiences, convenient service processes, and customers' positive evaluations of the overall hotel stay. The findings are discussed in detail in the following below. Although memorable experiences may contribute to loyalty formation, memorability is conceptually positioned in this study as an experiential characteristic rather than as a behavioral indicator of customer loyalty (Carmo et al., 2022; Guan et al., 2021).

The result of hypothesis testing shows that experiential marketing has a positive and significant effect on customer loyalty. In other words, when customers perceive their hotel experience as engaging, enjoyable, distinctive, and memorable, they are more likely to revisit the hotel, recommend it to other people, and select the same hotel in the future (Guan et al., 2021). This result demonstrates that hotel customers evaluate more than the functional benefits of rooms and supporting facilities (Alnawas & Hemsley-Brown, 2019). They also evaluate the sensory, emotional, cognitive, behavioral, and relational experiences developed throughout their interaction with the hotel (Becker & Jaakkola, 2020). A visually attractive environment, comfortable atmosphere, personalized employee interaction, distinctive hospitality concept, and memorable service encounter can create a stronger psychological connection between customers and the hotel (Guan et al., 2021). As a result, memorable and personalized experiences can become an important source of differentiation (Carmo et al., 2022). Experiential marketing allows hotels to move beyond selling rooms and develop an emotionally meaningful hospitality experience that customers are willing to repeat (Subakti et al., 2024). Experiential marketing captures customers' sensory, emotional, cognitive, behavioral, and relational responses to hotel encounters, whereas customer loyalty is reflected through post-consumption behavioral intentions such as revisiting, recommending, and maintaining preference for the hotel (Carmo et al., 2022; Rather & Hollebeek, 2019). Accordingly, the conceptual distinction between experiential marketing and customer loyalty is maintained by treating memorable experience as an antecedent-related experiential evaluation rather than as a loyalty outcome (Becker & Jaakkola, 2020; Carmo et al., 2022).

The result of hypothesis testing indicates that experiential marketing has a positive and significant effect on customer satisfaction. Experiential marketing can improve this evaluation because it adds emotional and symbolic value to the functional benefits of hotel services (Carmo et al., 2022). Customers

are not only satisfied because the room is available and the service is completed correctly, but also because the entire stay makes them feel welcomed, comfortable, appreciated, or pleasantly surprised (Danurdara & Masatif, 2025). The result can also be explained by the multidimensional nature of hotel experiences such as, hotel experience quality consists of several dimensions that collectively influence customers' evaluations, also customers may develop satisfaction through tangible and intangible elements, including physical comfort, service personalization, emotional security, employee responsiveness, aesthetic atmosphere, and the perceived uniqueness of the experience (Alnawas & Hemsley-Brown, 2019). Hence, a hotel may possess attractive facilities, but these facilities will not necessarily create satisfaction when employee interactions, service consistency, or emotional engagement do not support the intended experience (Danurdara & Masatif, 2025).

The result of hypothesis testing shows that service convenience has a positive and significant effect on customer loyalty. In the hotel context, service convenience may include ease of obtaining information, making reservations, accessing the hotel, completing check-in, requesting hotel services, making payments, and completing check-out (Siratan & Liu, 2026). When these processes are straightforward and efficient, customers perceive that the hotel respects their time and minimizes unnecessary effort (Sun & Pan, 2023). This favorable evaluation can encourage customers to return and recommend the hotel (Pinaraswati et al., 2024). However, service convenience should not be understood as eliminating human interaction completely (Sun & Pan, 2023). Digital services can simplify transactions, but customers may still require employee assistance for complex requests, service failures, or personalized hospitality (Siratan & Liu, 2026).

The result of hypothesis testing demonstrates that service convenience has a positive and significant effect on customer satisfaction. Since customers may need to search for room information, compare rates, make reservations, confirm payment, travel to the hotel, complete registration, access their rooms, request additional services, report problems, and complete departure procedures (Becker & Jaakkola, 2020). Difficulties at any of these stages can reduce satisfaction, even when the core hotel product is acceptable (Sun & Pan, 2023). Conversely, an integrated and convenient service process reduces uncertainty and customer frustration (Pinaraswati et al., 2024). Clear booking information, accurate reservation confirmation, short waiting times, simple documentation, responsive communication, easily accessible hotel facilities, and transparent payment procedures can improve customers' overall evaluations of the stay (Sun & Pan, 2023). The positive effect of service convenience on satisfaction may be increasingly important because hotel customers interact with both physical and digital service channels (Siratan & Liu, 2026).

The result of hypothesis testing indicates that customer satisfaction has a positive and significant effect on customer loyalty. Customer satisfaction reflects a positive evaluation of the comparison between customers' expectations and their perceived hotel performance (El-Adly, 2019). When customers believe that the hotel has fulfilled or exceeded their expectations, they face less uncertainty in making future hotel decisions (Anabila et al., 2022). Returning to a previously satisfactory hotel can reduce the perceived risk associated with selecting an unfamiliar alternative (Rather & Hollebeek, 2019). It is an important strategic asset because it can influence future revenue through repeat stays, recommendations, and favorable customer communication (Anabila et al., 2022). Satisfied customers may also be more willing to consider other hotel services, join loyalty programs, book directly, or tolerate minor service inconsistencies (Rather & Hollebeek, 2019). Nevertheless, satisfaction should not automatically be assumed to guarantee loyalty (Rather & Hollebeek, 2019). Customers may remain sensitive to price, location, availability, competing promotions, and changing travel requirements (Badan Pusat Statistik, 2026). Therefore, hotels need to convert satisfaction into active loyalty by maintaining post-stay communication, providing relevant incentives, recognizing returning customers, and creating clear reasons for customers to choose the same hotel again (Anabila et al., 2022).

The result of experiential marketing has a positive and significant effect on customer loyalty mediated customer satisfaction. Experiential marketing contributes to both satisfaction and loyalty as it creates favourable customer evaluations, which then encourage repeat-stay intentions, recommendations, and preference for the hotel (Carmo et al., 2022). Customers who experience attractive facilities, personalized interactions, emotional engagement, and distinctive hospitality are likely to feel satisfied, and this satisfaction subsequently strengthens their loyalty (Subakti et al., 2024). The mediating effect emphasizes the importance of evaluating whether experiential initiatives genuinely

improve customer satisfaction (Danurdara & Masatif, 2025). Hotels may invest in interior concepts, themed events, personalized amenities, entertainment, digital features, or social-media-friendly facilities (Carmo et al., 2022). However, these initiatives will not necessarily produce loyalty if they are perceived as irrelevant, inconsistent, inconvenient, or disconnected from customers' needs (Becker & Jaakkola, 2020). The mediation result also indicates that customer satisfaction should be treated as an intermediate performance indicator for experiential marketing (Carmo et al., 2022). Before expecting experiential initiatives to increase repeat bookings, hotel managers should first determine whether those initiatives improve customer satisfaction scores, positive reviews, complaint reduction, and perceived value (Anabila et al., 2022).

The result of service convenience has a positive and significant effect on customer loyalty mediated customer satisfaction. The finding suggests that customers interpret easy and efficient service processes as a positive component of hotel performance (Sun & Pan, 2023). When customers can obtain information, make reservations, access services, communicate with employees, make payments, and complete check-out conveniently, they are more likely to feel satisfied (Pinaraswati et al., 2024). This satisfaction subsequently increases their willingness to reuse and recommend the hotel (Anabila et al., 2022). The mediating relationship indicates that operational convenience becomes strategically valuable when customers recognize and positively evaluate it (Sun & Pan, 2023). A faster check-in process, for example, does not merely save time but also reduces stress and creates a positive impression of hotel competence (Pinaraswati et al., 2024).

CONCLUSION

This study provides an understanding of customer loyalty formation among customers of three-, four-, and five-star hotels in Jakarta by examining the roles of experiential marketing, service convenience, and customer satisfaction. The findings highlight that customer loyalty in the hospitality industry is not developed solely through functional accommodation services but through a combination of emotional experiences, efficient service processes, and positive customer evaluations. Experiential marketing represents an important strategic approach because memorable sensory, emotional, cognitive, behavioral, and relational experiences can strengthen customers' attachment toward hotels. Meanwhile, service convenience contributes to loyalty by reducing customer effort and improving the overall service journey, including reservation, access, transaction, and post-stay interactions. Furthermore, this study confirms the strategic role of customer satisfaction as an important mechanism that explains how experiential marketing and service convenience are transformed into customer loyalty. Customers who perceive hotel experiences as meaningful and service processes as convenient are more likely to develop satisfaction, which subsequently encourages revisit intentions, recommendations, and long-term relationships with the hotel. Therefore, customer loyalty in star-rated hotels should be viewed as the outcome of integrated experiential and operational excellence rather than a consequence of service quality alone. This study contributes to hospitality marketing literature by integrating emotional and functional dimensions within a single framework and emphasizing satisfaction as a psychological mechanism underlying loyalty development.

The findings provide several managerial implications for star-rated hotel managers. Hotels should prioritize experiential marketing strategies by creating memorable and personalized guest experiences through attractive environments, employee engagement, local cultural elements, and meaningful service interactions. However, experiential initiatives should be supported by convenient service processes because customers increasingly expect effortless interactions through digital platforms and efficient operational systems. Therefore, hotel managers should improve reservation accessibility, check-in and check-out efficiency, payment flexibility, communication responsiveness, and service recovery mechanisms. Additionally, customer satisfaction should be monitored as a key performance indicator because satisfaction represents the bridge between service strategies and sustainable customer loyalty.

This study has several limitations that should be considered. First, the research focuses only on customers of star-rated hotels in Jakarta; therefore, the findings may not fully represent customer perceptions in other Indonesian regions with different tourism characteristics, cultural backgrounds, and hotel market conditions. Second, this study applies a cross-sectional research design, which captures customer perceptions at a specific period and may not reflect changes in customer preferences and

loyalty behavior over time. Third, the study relies on self-reported questionnaire responses, which may contain subjective evaluations and potential response bias. Finally, this research examines limited variables, while other factors such as perceived value, brand trust, digital service quality, brand image, and loyalty program effectiveness may also influence hotel customer loyalty.

Future research is encouraged to expand this study by examining different geographical contexts, including hotels in other Indonesian cities or international hospitality markets, to improve generalizability. Longitudinal studies are also recommended to investigate how customer loyalty develops and changes throughout different stages of the customer relationship. Furthermore, future studies may incorporate additional variables such as digital experience, perceived value, trust, brand attachment, sustainability practices, and online review engagement to provide a more comprehensive explanation of loyalty behavior in the hospitality industry. Mixed-method approaches combining quantitative and qualitative perspectives are also suggested to explore deeper insights into customers' emotional and behavioral responses toward hotel experiences.

REFERENCES

Al Khattab, S. A., & Aldehayyat, J. S. (2011). Perceptions of service quality in Jordanian hotels. International Journal of Business and Management, 6(7), 226–233. https://doi.org/10.5539/ijbm.v6n7p226

Alnawas, I., & Hemsley-Brown, J. (2019). Examining the key dimensions of customer experience quality in the hotel industry. *Journal of Hospitality Marketing & Management*, 28(7), 833–861. https://doi.org/10.1080/19368623.2019.1568339

Anabila, P., Ameyibor, L. E. K., Allan, M. M., & Alomenu, C. (2022). Service quality and customer loyalty in Ghana's hotel industry: The mediation effects of satisfaction and delight. *Journal of Quality Assurance in Hospitality & Tourism*, 23(3), 748–770. https://doi.org/10.1080/1528008X.2021.1913691

Anto, J., & Siratan, E. D. (2026). SMM dan brand image pada pembelian Kopi Kenangan: Mediasi emotional attachment. *Business Management Journal*, 22(1), 58–73. https://doi.org/10.30813/bmj.v22i1.9668

Badan Pusat Statistik. (2026). Tingkat penghunian kamar hotel 2025. https://www.bps.go.id/id/publication/2026/04/30/cef36ecbc2296f8a9e54bf11/tingkat-penghunian-kamar-hotel-2025.html

Becker, L., & Jaakkola, E. (2020). Customer experience: Fundamental premises and implications for research. *Journal of the Academy of Marketing Science*, 48, 630–648. https://doi.org/10.1007/s11747-019-00718-x

Carmo, D.I. S., Marques, S., & Dias, Á. (2022). The influence of experiential marketing on customer satisfaction and loyalty. *Journal of Promotion Management*, 28(7), 994–1018. https://doi.org/10.1080/10496491.2022.2054903

Danurdara, A. B., & Masatif, A. (2025). Assessing the customer experience quality and customer loyalty: The mediating role of customer satisfaction. *Innovative Marketing*, 21(2), 248–259. https://doi.org/10.21511/im.21(2).2025.20

El-Adly, M. I. (2019). Modelling the relationship between hotel perceived value, customer satisfaction, and customer loyalty. *Journal of Retailing and Consumer Services*, 50, 322–332. https://doi.org/10.1016/j.jretconser.2018.07.007

Guan, J., Wang, W., Guo, Z., Chan, J. H., & Qi, X. (2021). Customer experience and brand loyalty in the full-service hotel sector: The role of brand affect. *International Journal of Contemporary Hospitality Management*, 33(5), 1620–1645. https://doi.org/10.1108/IJCHM-10-2020-1177

Hair, J. F., Jr., Hult, G. T. M., Ringle, C. M., Sarstedt, M., & Danks, N. P. (2021). *An introduction to structural equation modeling: Partial least squares structural equation modeling (PLS-SEM)*

using R: A workbook. Springer.

Lai, I. K. W. (2019). Hotel image and reputation on building customer loyalty: An empirical study in Macau. Journal of Hospitality and Tourism Management, 38, 111–121. https://doi.org/10.1016/j.jhtm.2019.01.003

Lemon, K. N., & Verhoef, P. C. (2016). Understanding customer experience throughout the customer journey. *Journal of Marketing*, 80(6), 69–96. https://doi.org/10.1509/jm.15.0420

Nunkoo, R., Teeroovengadum, V., Ringle, C. M., & Sunnassee, V. (2020). Service quality and customer satisfaction: The moderating effects of hotel star rating. International Journal of Hospitality Management, 91, 102414. https://doi.org/10.1016/j.ijhm.2019.102414

Padlee, S. F., Thaw, C. Y., & Zulkiffli, S. N. A. (2019). The relationship between service quality, customer satisfaction and behavioural intentions in the hospitality industry. Tourism and Hospitality Management, 25(1), 121–139. https://doi.org/10.20867/thm.25.1.9

Palinkas, L. A., Horwitz, S. M., Green, C. A., Wisdom, J. P., Duan, N., & Hoagwood, K. (2015). Purposeful sampling for qualitative data collection and analysis in mixed method implementation research. Administration and Policy in Mental Health and Mental Health Services Research, 42(5), 533–544. https://doi.org/10.1007/s10488-013-0528-y

Pinaraswati, S. O., Farida, I., Susilowati, S., & Suprihati, S. (2024). The influence of service convenience and price fairness on customer loyalty: Mediating effect of customer satisfaction. *International Journal of Economics, Business and Accounting Research (IJEBAR)*, 8(2), 537–550. https://doi.org/10.29040/ijebar.v8i2.14097

Rather, R. A., & Hollebeek, L. D. (2019). Exploring and validating social identification and social exchange-based drivers of hospitality customer loyalty. *International Journal of Contemporary Hospitality Management*, 31(3), 1432–1451. https://doi.org/10.1108/IJCHM-10-2017-0627

Schmitt, B. (1999). Experiential marketing. Journal of Marketing Management, 15(1–3), 53–67. https://doi.org/10.1362/026725799784870496

Seiders, K., Voss, G. B., Grewal, D., & Godfrey, A. L. (2007). SERVCON: Development and validation of a multidimensional service convenience scale. Journal of the Academy of Marketing Science, 35(1), 144–156. https://doi.org/10.1007/s11747-006-0001-5

Siratan, E. D., & Liu, J. S. (2026). The effect of AI chatbot perceived usefulness and service convenience on customer loyalty with mediating role of customer experience in travel agency services. *HOSPITERA: Journal of Hospitality and Tourism Research*, 1(1), 24–34.

Siratan, E. D., Olivia, T., Hermawan, N., & Ningsih, R. K. T. (2026). Internal control system implementation and employee performance in the Indonesian banking sector. *Jurnal Bisnis dan Kewirausahaan (Journal of Business and Entrepreneurship)*, 14(1), 135–149.

Subakti, A. G., Lestari, N. S., Adriyanto, H., & Triana, I. (2024). Enhancing customer satisfaction and loyalty through experiential marketing and service quality in Indonesian heritage hotels. *TourismSpectrum: Diversity & Dynamics*, 1(1), 16–24. https://doi.org/10.56578/tsdd010102

Sun, S., & Pan, Y. (2023). Effects of service quality and service convenience on customer satisfaction and loyalty in self-service fitness centers: Differences between staffed and unstaffed services. *Sustainability*, 15(19), Article 14099. https://doi.org/10.3390/su151914099

Tasci, A. D. A., & Milman, A. (2019). Exploring experiential consumption dimensions in the theme park context. Current Issues in Tourism, 22(7), 853–876. https://doi.org/10.1080/13683500.2017.1321623

Yoo, Y., Park, Y., Lim, D., & Seo, D. (2022). *5-star hotel customer satisfaction analysis using hybrid methodology* [Preprint]. arXiv. https://doi.org/10.48550/arXiv.2209.12417